Building Guide

Colorado Chapter of the International Code Council

Single Family Residential One Story Detached Garage

How to Use this Guide

Provide two sets of plans and complete the following:

1 Complete this Building Guide by filling in the blanks on page two and three, and indicating which construction details will be used.

2 Provide 2 Plot Plans (site plan) showing dimensions of your project or addition and its relationship to existing buildings or structures on the property and the distance to existing property lines, drawn to scale.

3 Fill out a building permit application.

The majority of permit applications are processed with little delay. The submitted documents will help determine if the project is in compliance with building safety codes, zoning ordinances and other applicable laws.

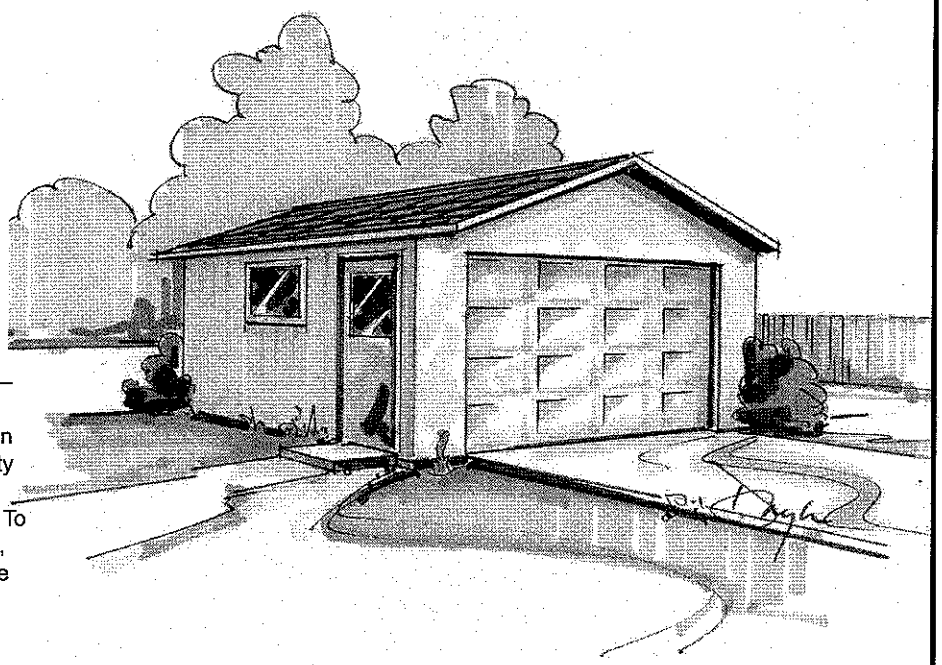

The Colorado Chapter of the International Code Council is a professional organization seeking to promote the public health, safety and welfare to building construction. We appreciate your feedback and suggestions. To obtain a master copy of this building guide, please write to the Colorado Chapter of the International Code Council, P.O. Box 961, Arvada, CO 80001.
http://www.coloradochaptericc.org

This handout was developed by the Colorado Chapter of the International Code Council as a basic plan submittal under the 2006 International Residential Code. It is not intended to cover all circumstances. Check with your Department of Building Safety for additional requirements.

Fremont County Building Department
Revised 05/17/2011
By Direction Of Building Official

Single Family Residential One Story Detached Garage

Directions

1. Fill in the blanks on pages 2 and 3 with dimensions and materials which will be used to build the structure. Please print legibly.
2. Indicate in the check boxes on page 3 which detail from page 4 will be used.

Note: Heated garages may require special provisions.

Address: _____

Floor Plan

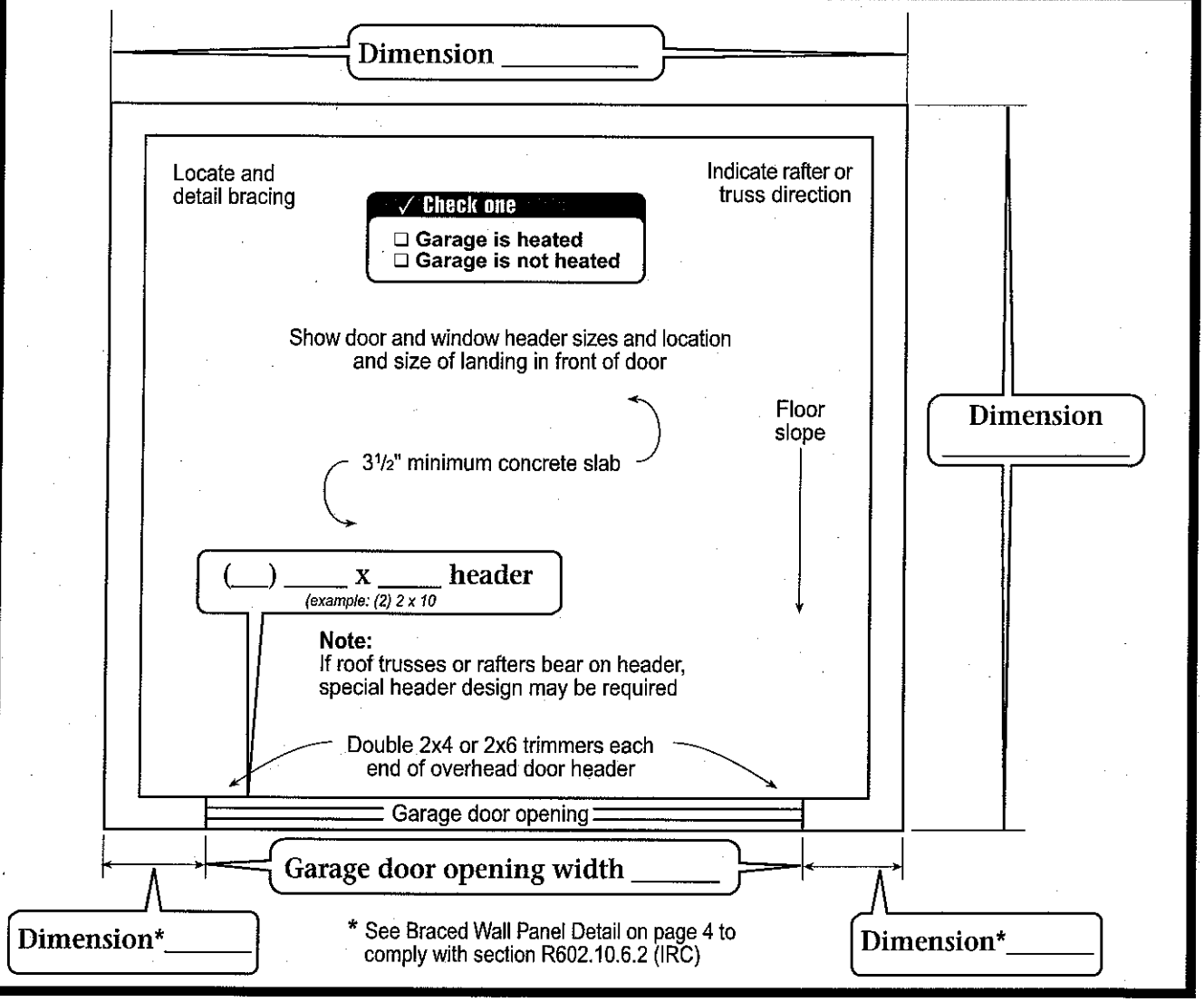

This handout was developed by the Colorado Chapter of the International Code Council as a basic plan submittal under the 2006 International Residential Code. It is not intended to cover all circumstances. Check with your Department of Building Safety for additional requirements.

Fremont County Building Department
Revised 05/17/2011
By Direction Of Building Official

Single Family Residential One Story Detached Garage

Note: For roofs with slopes less than 4:12, follow manufacturer's instructions for low slope application of roofing material.

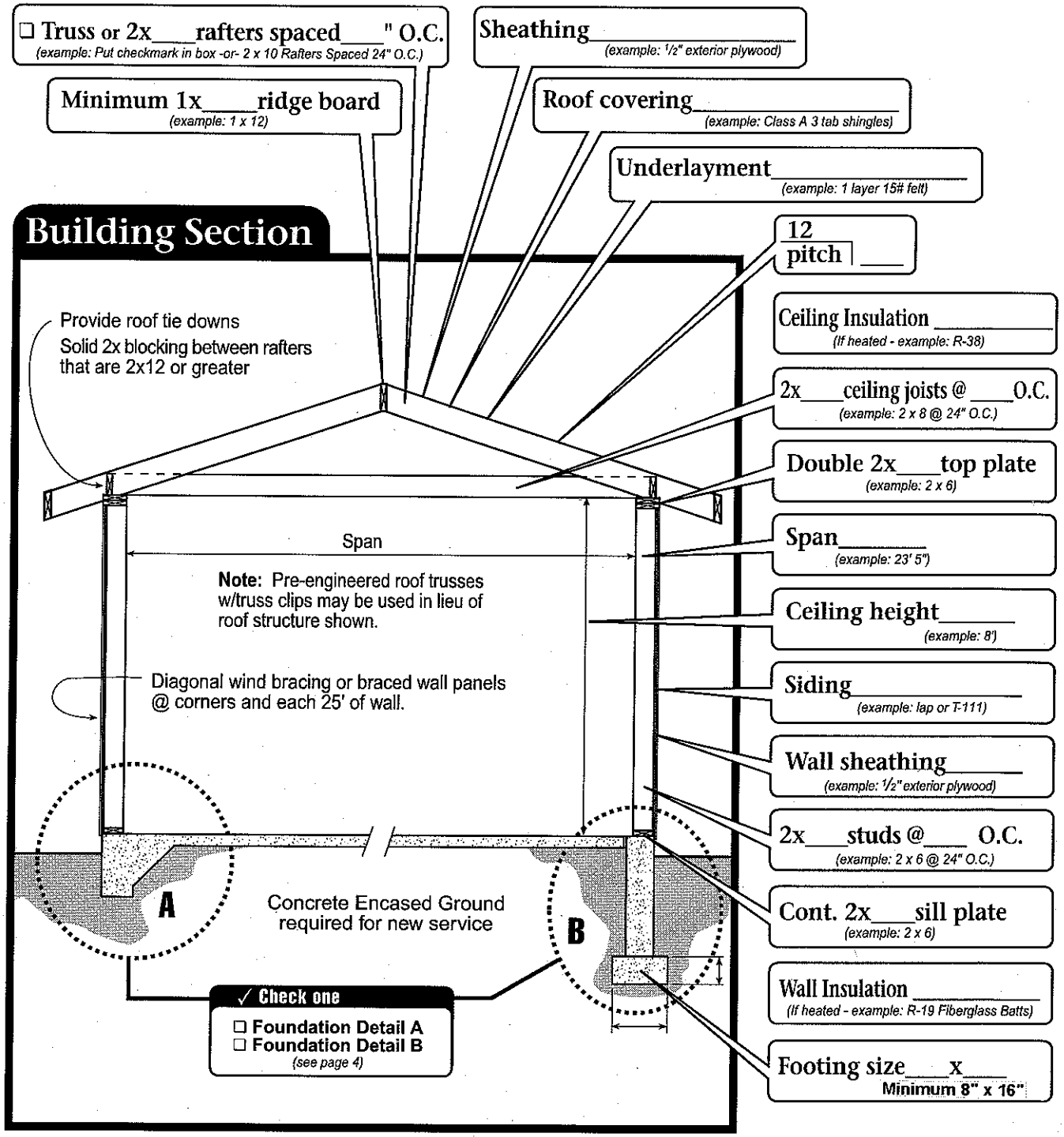

This handout was developed by the Colorado Chapter of the International Code Council as a basic plan submittal under the 2006 International Residential Code. It is not intended to cover all circumstances. Check with your Department of Building Safety for additional requirements.

Fremont County Building Department
Revised 05/17/2011
By Direction Of Building Official

Single Family Residential One Story Detached Garage

Foundation Detail A

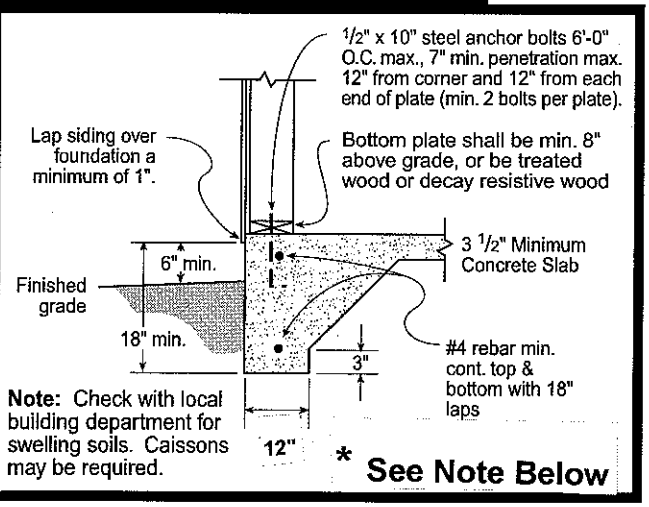

Note: Check with local building department for swelling soils. Caissons may be required.

Foundation Detail B

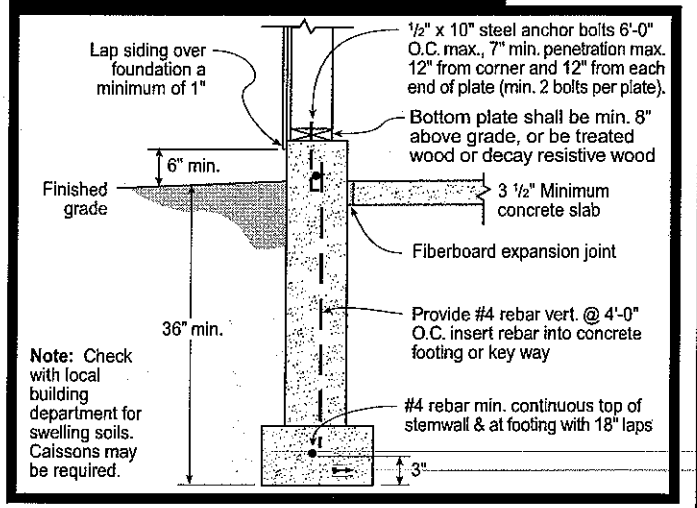

Note: Check with local building department for swelling soils. Caissons may be required.

Braced Wall Panel Detail

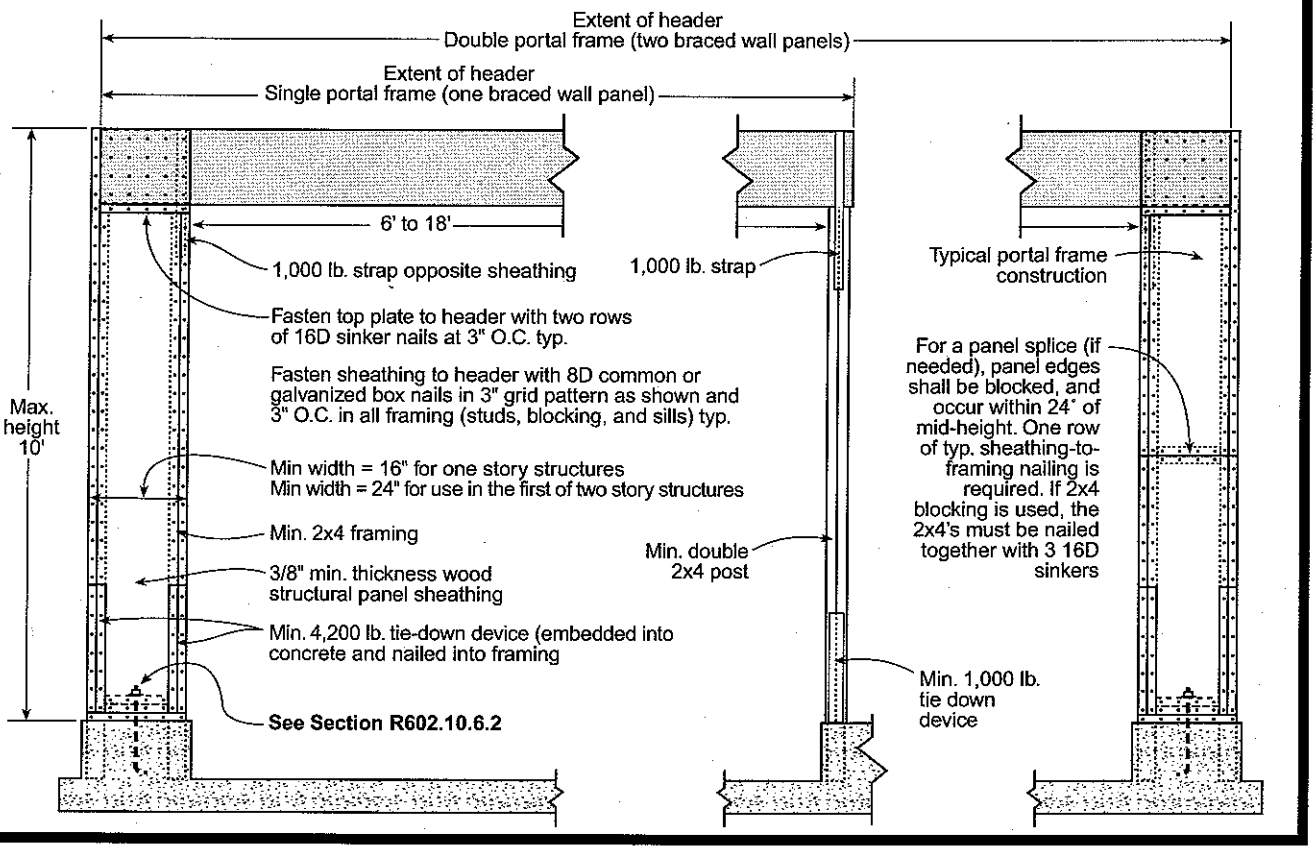

This handout was developed by the Colorado Chapter of the International Code Council as a basic plan submittal under the 2006 International Residential Code. It is not intended to cover all circumstances. Check with your Department of Building Safety for additional requirements.

***NOTE: Foundation design acceptable for maximum building width of thirty (30) feet. Anything over thirty (30) feet requires engineering.**

Fremont County Building Department
Revised 05/17/2011
By Direction Of Building Official